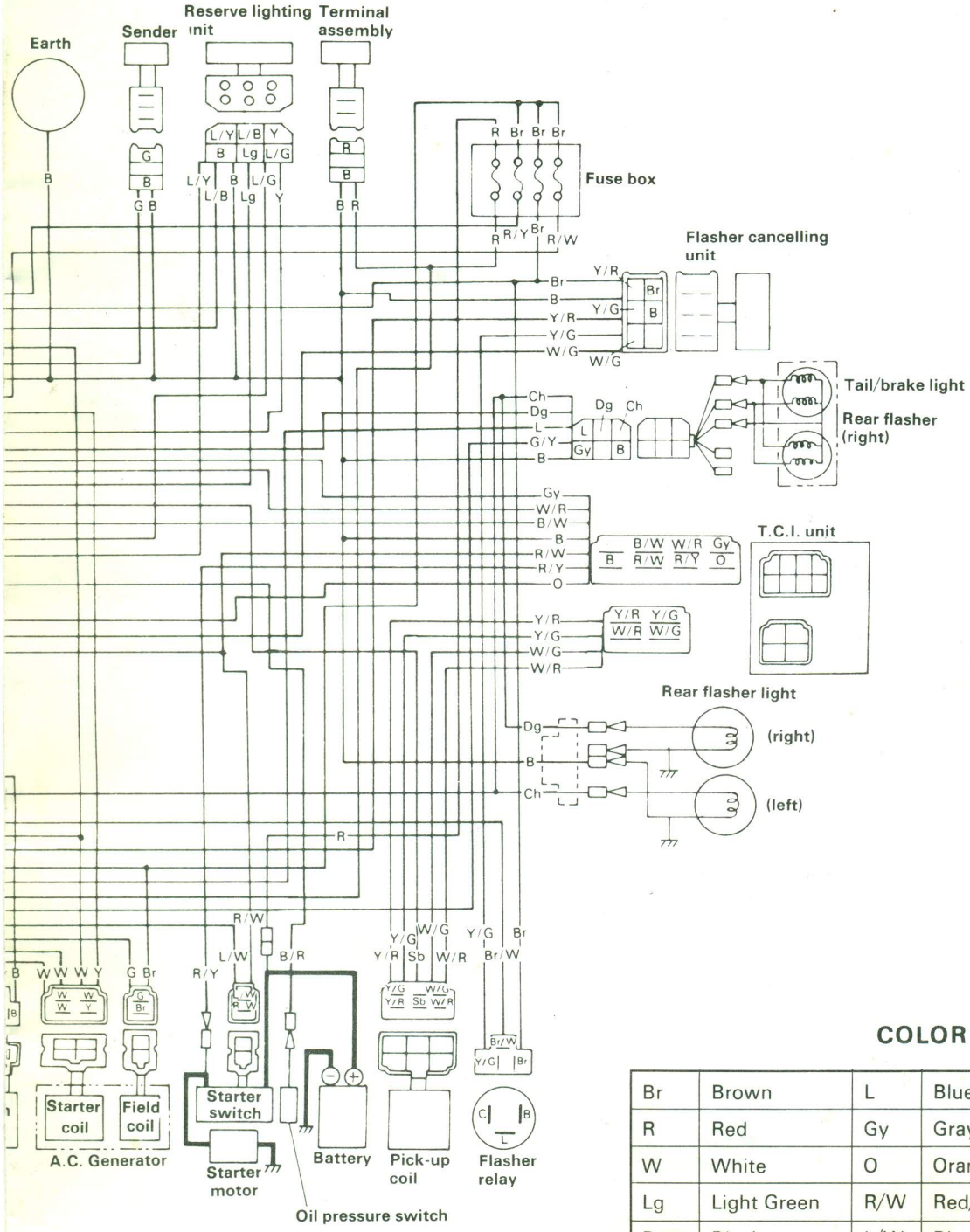

COLOR CODE

Br	Brown	L	Blue	Y/B	Yellow/Black
R	Red	Gy	Gray	Br/W	Brown/White
W	White	O	Orange	Y/G	Yellow/Green
Lg	Light Green	R/W	Red/White	W/G	White/Green
B	Black	L/W	Blue/White	Y/R	Yellow/Red
Y	Yellow	R/L	Red/Blue	W/R	White/Red
Dg	Dark Green	L/Y	Blue/Yellow	G/R	Green/Red
Ch	Chocolate	L/G	Blue/Green		

XS1100E WIRING DIAGRAM

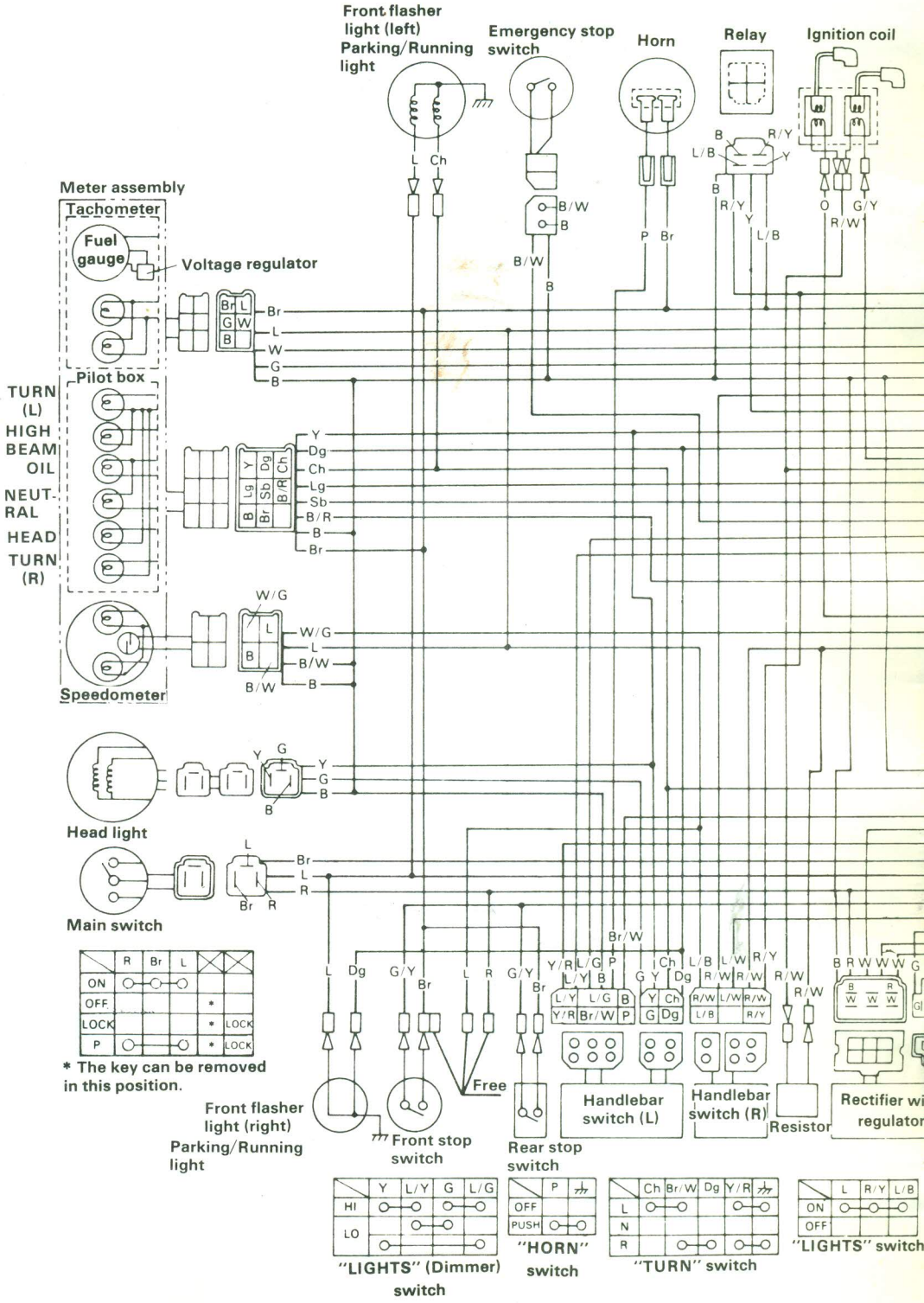

CABLE ROUTING

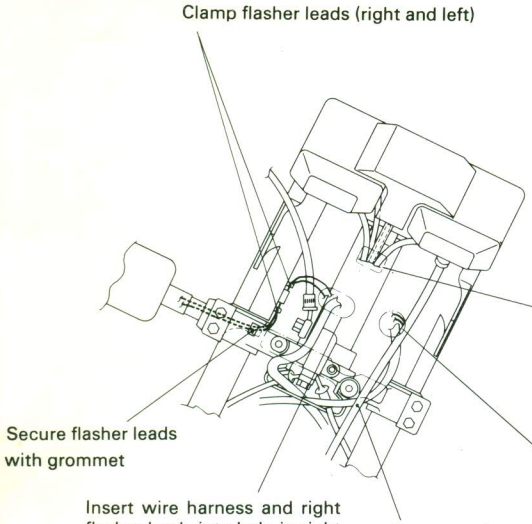

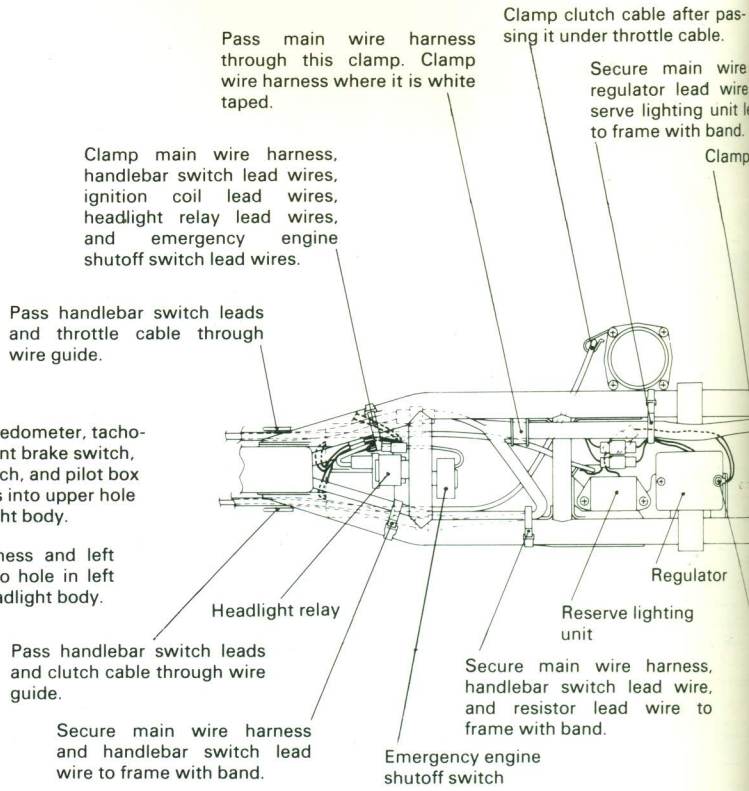

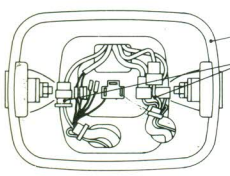

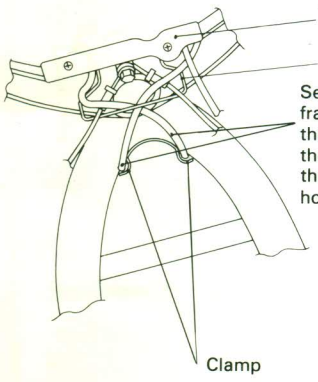

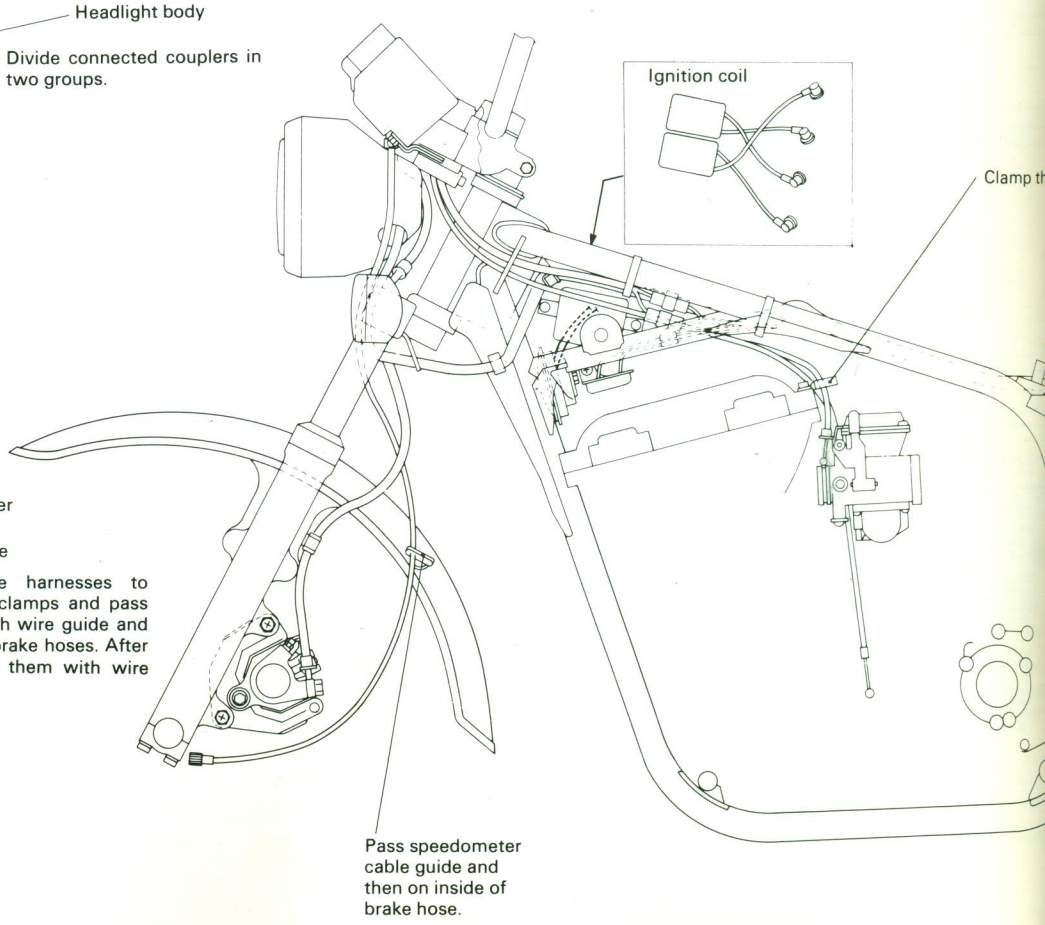

rness,
nd re-
d wire

in wire harness

el gauge unit
ad wire

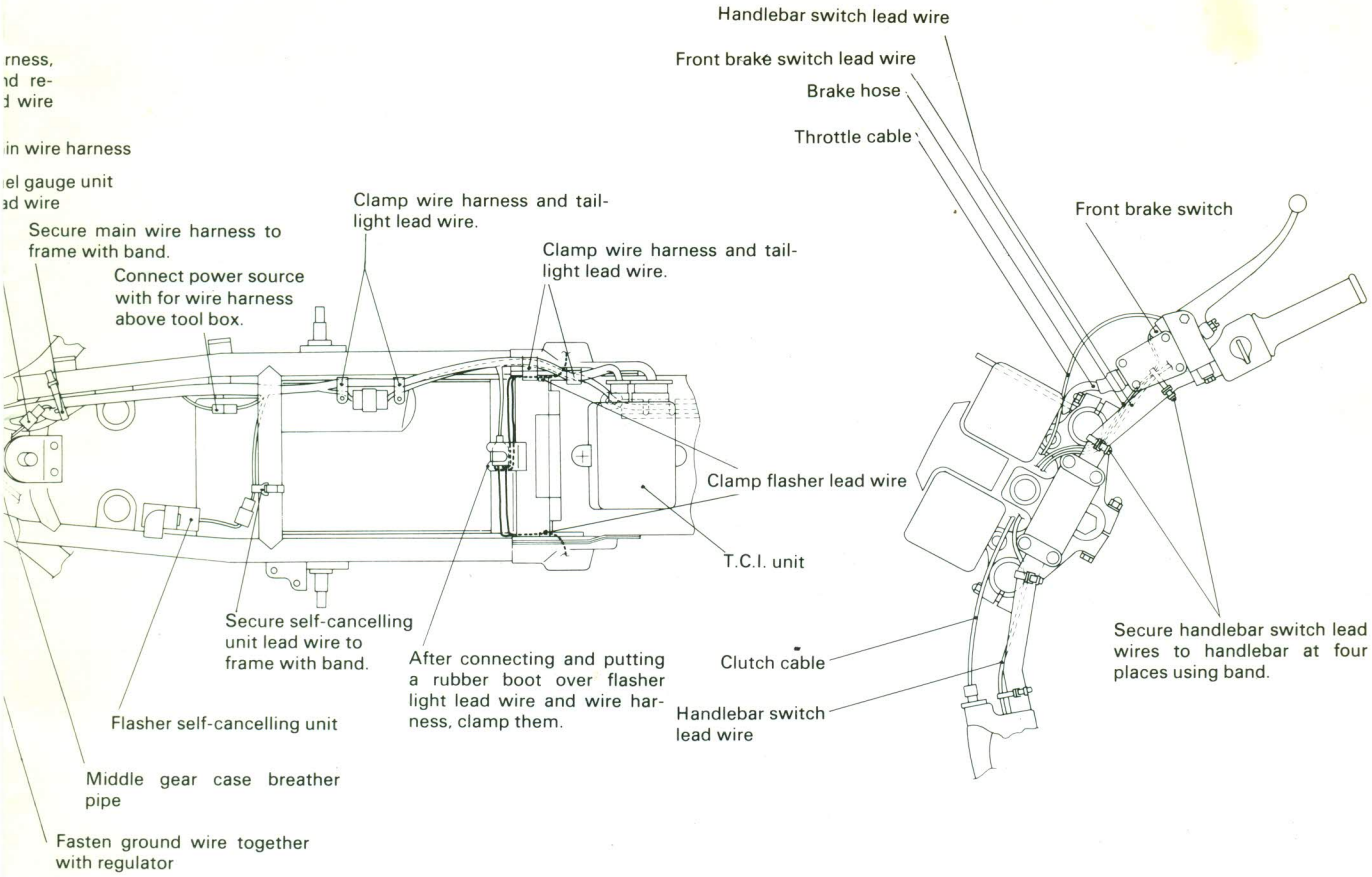
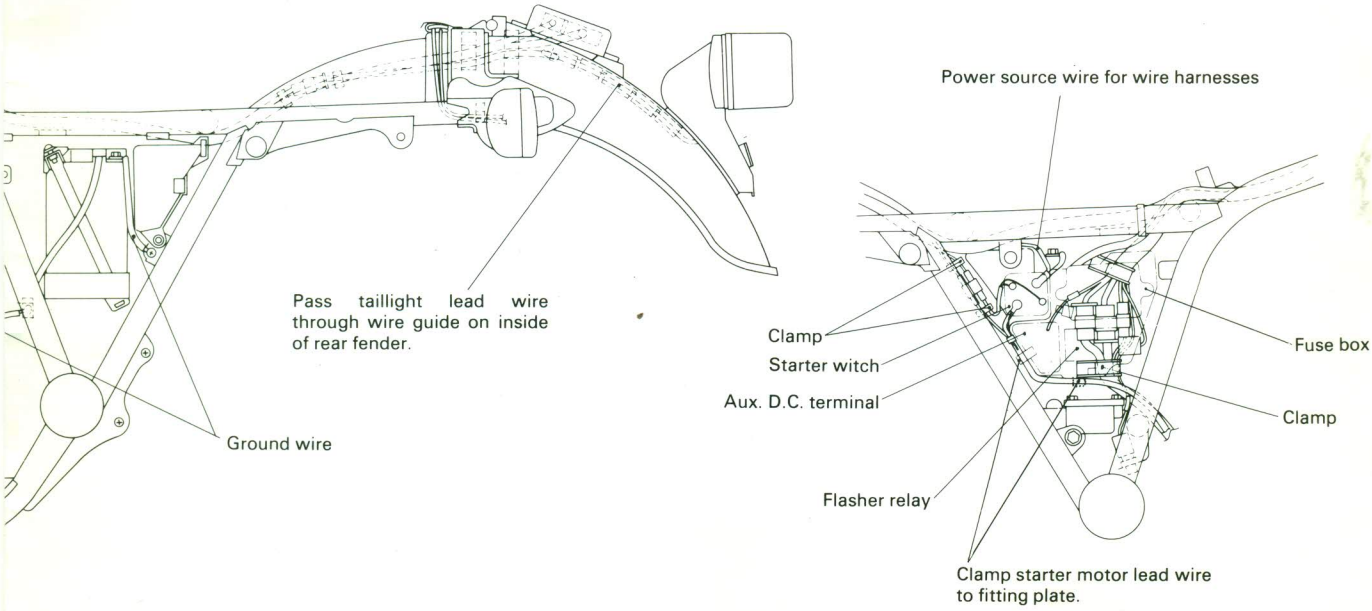
tle cable